Cylinder Installation Instruction

MODEL

COCO-HTE-9310A
COCO-HTE-9311A
COCO-HTE-9321A
COCO-HTE-9331A

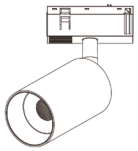

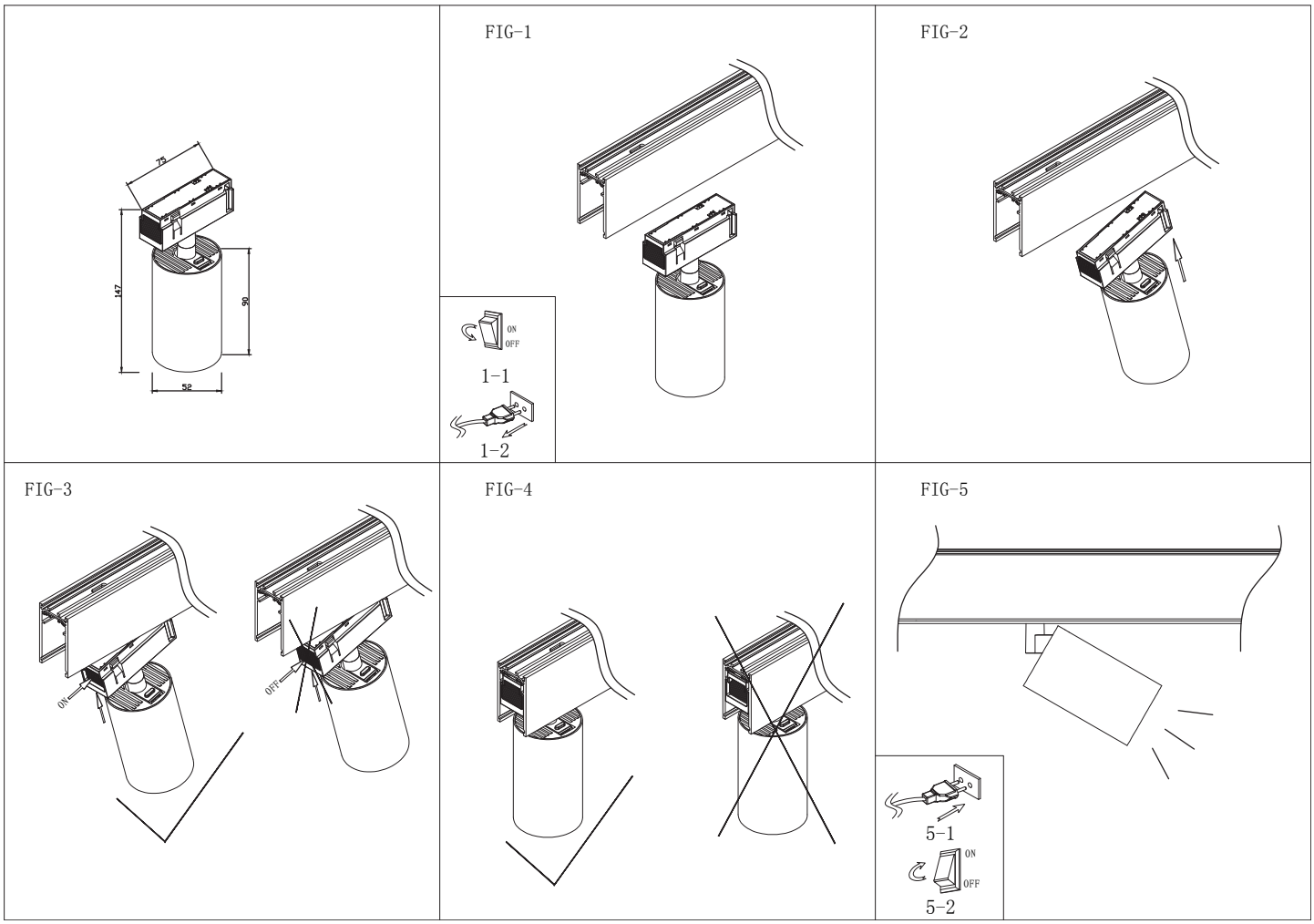

© 2020 Cosineltg.com
All rights reserved

20A Audrey Place
Fairfield, NJ 07004

T: 718-887-6403
cosineltg.com

COSINE LIGHTING